DRG. No.	W32GH000/2
DRG. REF.	

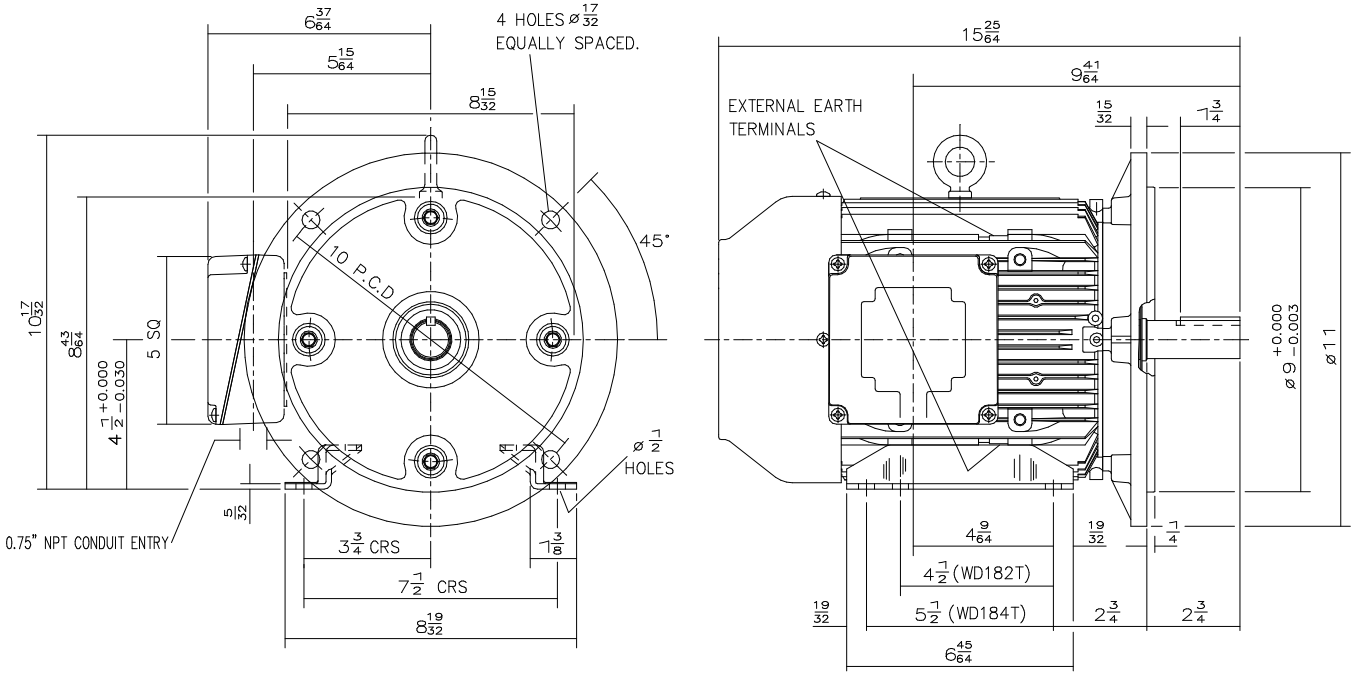

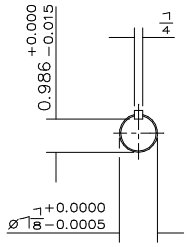

VIEW ON END
OF SHAFT

TERMINAL BOX POSITION:- CAN BE ARRANGED AT EITHER 9, 12 OR 3 O'CLOCK BY MOVIN
STANDARD TERMINAL BOX POSITION IS 9 O'CLOCK AS SHOWN.
CONDUIT ENTRIES:- TERMINAL BOX CAN BE ROTATED AT 90 INTERVALS.
(CONDUIT ENTRY POSITION SHOWN FOR ILLUSTRATION ONLY).

CUSTOMER		
ORDER No.		
PART No.		
OUR ORDER No.		
FRAME SIZE		
KW.	RPM.	
Hz	PHASE	
VOLTS	POLES	
BRGS.	DE.	NDE.
MOTOR NETT WT.		Kg.
SPECIAL REMARKS		

ALL DIMENSIONS IN INCHES.

FIRST ANGLE
PROJECTION

BROOK CROMPTON

Huddersfield, HD1 3LJ
ENGLAND

SHEET SIZE	TITLE				
A3	OUTLINE DIMENSION DRAWING 'W' ALUMINIUM TOTALLY ENCLOSED FAN COOLED 182/4TD FRAME FOOT & 'D' INCH FLANGE MOUNTED MOTORS.		NAME	DATE	
		DRAWN	MI	5-10-95	
		CHECKED	JWD	5-10-95	
		SCALE	1:3.5		

DRG. No.	W32GH000/2		
DRG. REF.			
REVISION:	DH	DATE	03-05-02